APPLICATION OF PRESSURE FILTRATION SYSTEMS in ALASKA

SFC Webinar

September 17th, 2013

ANTHC Presenters

- Pierre Costello, P.E
- Mike Soltis P.E
- John Warren, P.E.

Presentation Overview

- More than 80 % of surface water systems that we work with can be successfully treated with direct pressure filtration with a polymer coagulant.
- Often not considered in place of more complicated systems
- This presentation will discuss the Alaskan application and salient features of this successful system.
- Twenty years of installation

Treatment Goals

- Safe and Potable Water
- Primary regulatory requirements
  - Filtration and disinfection targets
  - Disinfection byproducts targets
- Palatable or aesthetically pleasing water
  - Taste, color and odor
  - Secondary targets
- Sustainable
  - Cost effective treatment
  - Reliable
  - KISS !!!!!!
  - > 95 % Efficiency

Alaska Surface Water Treatment Practice (Filtration Strategies)

- Filtration
  - Conventional Filtration
    - Coagulation – Flocculation – Sedimentation - Filtration
  - Direct Filtration
    - Coagulation - Flocculation – Filtration
  - Direct Filtration (In line filtration)
    - Pressure Filtration
    - Coagulation – Flocculation (Filter Head) - Filtration
- Membrane filtration - cartridge and bags
- Membrane filtration – nanofiltration
- Diatomaceous earth filtration

Conventional and Direct Filtration (Filtration Strategies)

- Reliable and industry standard proven treatment practices – simple and effective.
- Strong and easy to replace media
- Pumps, mixers, level controls bells and whistles required
- Treatment experience

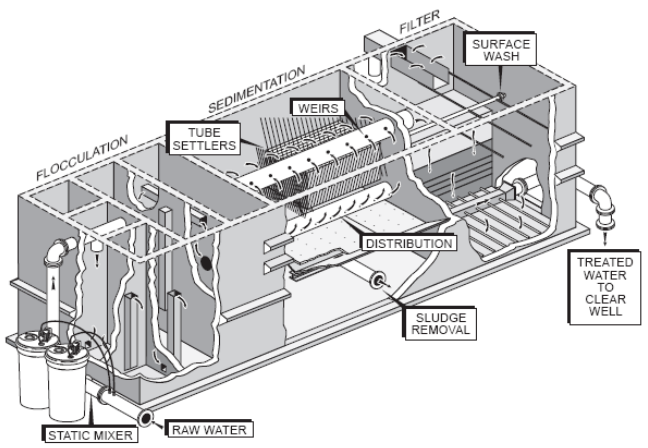

Typical conventional package treatment plant

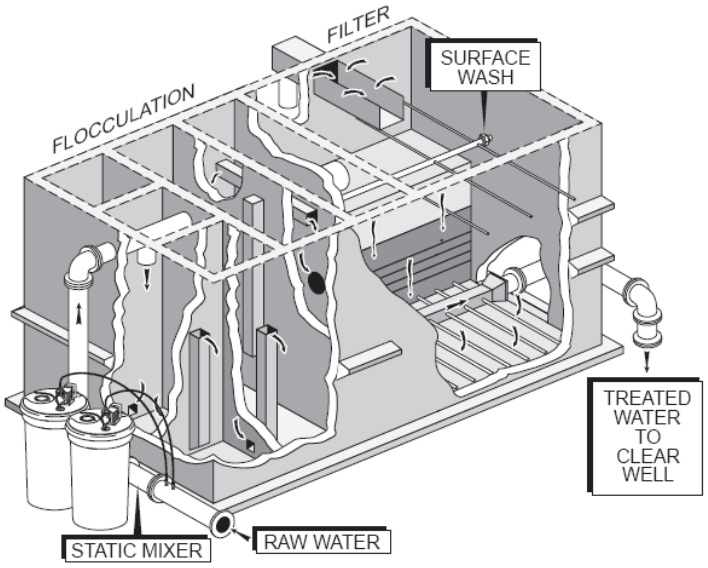

Direct filtration - gravity filter system

Alaska Surface Water Treatment Practice (Filtration Strategies)

- Membrane Cartridge Filtration
  - Targets and screens giardia and crypto
  - Requires consistent high quality source water
  - Additional treatment required to remove taste, color and odor
  - Filters can be expensive
  - " Don't look inside"

Alaska Surface Water Treatment (Filtration Strategies)

- Nano Filtration
  - Good quality treated water
  - Typically require pretreatment
  - High pressure pumps
  - Requires heating of source water
  - Chemicals
  - Expensive membrane replacement (approx 10 years)

Direct Filtration vs Conventional Treatment

- Less pump requirements
  - Gravity systems require none
  - Single raw water source pump
- No secondary effluent pumps
- No Level controls
- Mechanical mixing not required. Mixing done with an in-line mixer
- Treatment process is fixed
  - No individual process's to adjust

Direct Pressure Filtration with Polymer Coagulation

- In line direct pressure filtration
- Flocculation occurs in filter head – mixers not needed
- Stronger floc needed (polymers)
- Only pump once

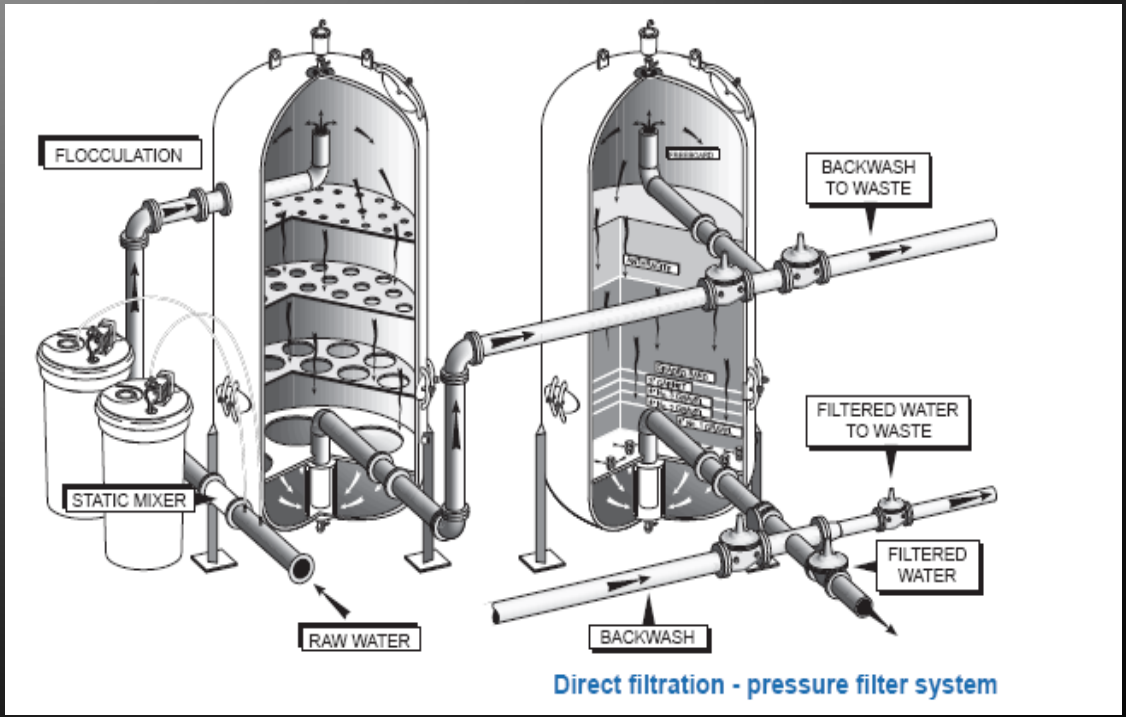

Direct filtration - pressure filter system

Polyelectrolytes(Polymers)

- Polymers are long string like molecules which can be used as a primary coagulant or as an aid.
- Positively charged polyelectrolytes are called cationic
- Negatively charged polyelectrolytes are called anionic polymers

Coagulation

- Coagulation is the process of decreasing the stability of the of the colloids to form an agglomerate. The agglomerate can settle easier or be filtered

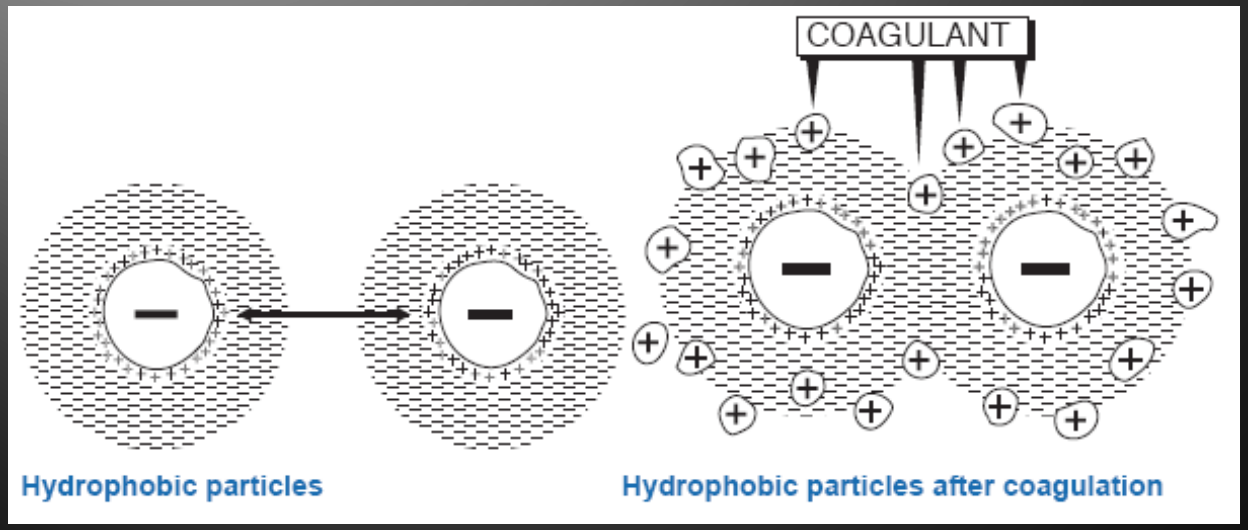

How do Polymers Work – Charge Neutralization!

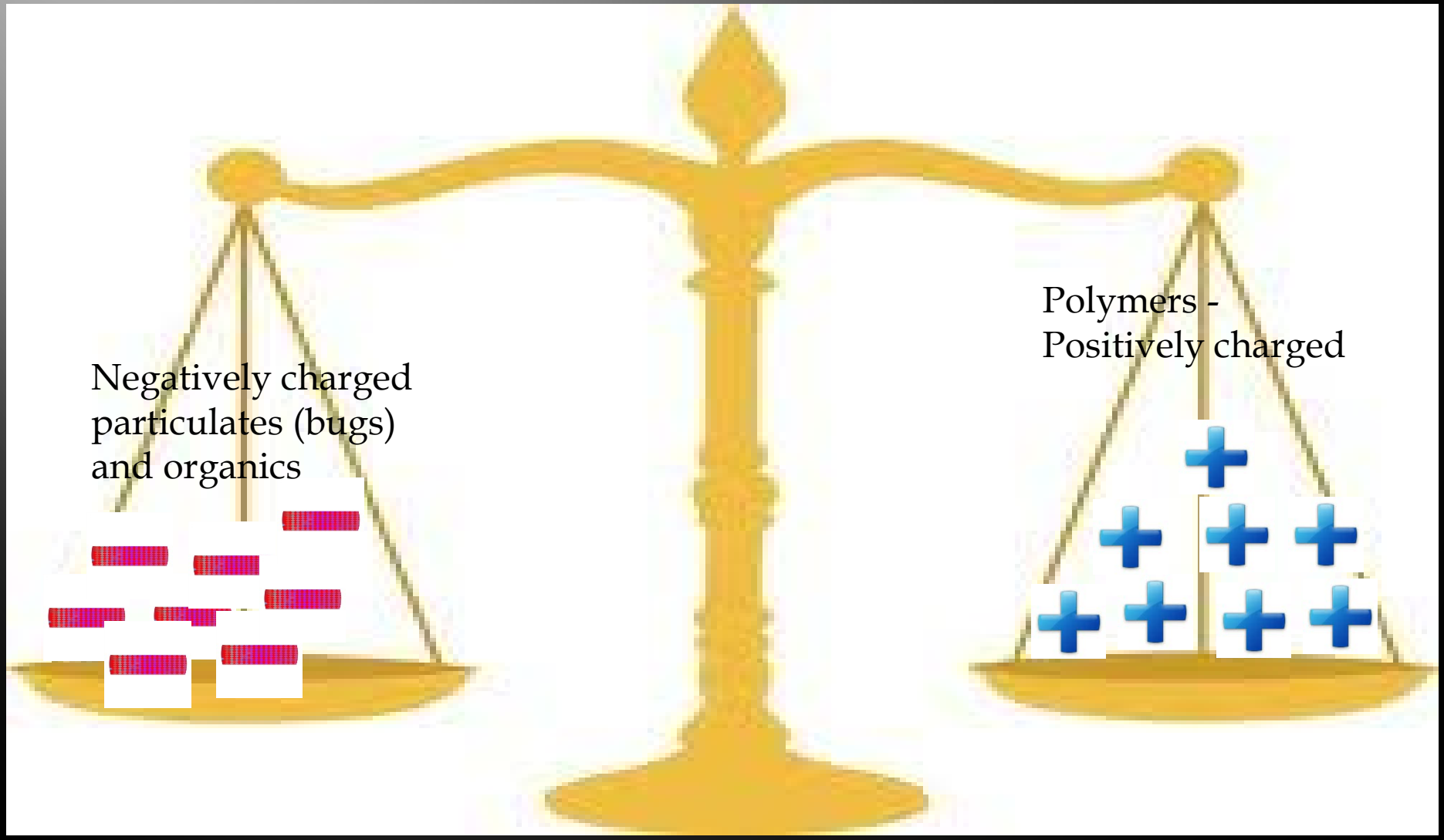

Polymer Coagulation Process

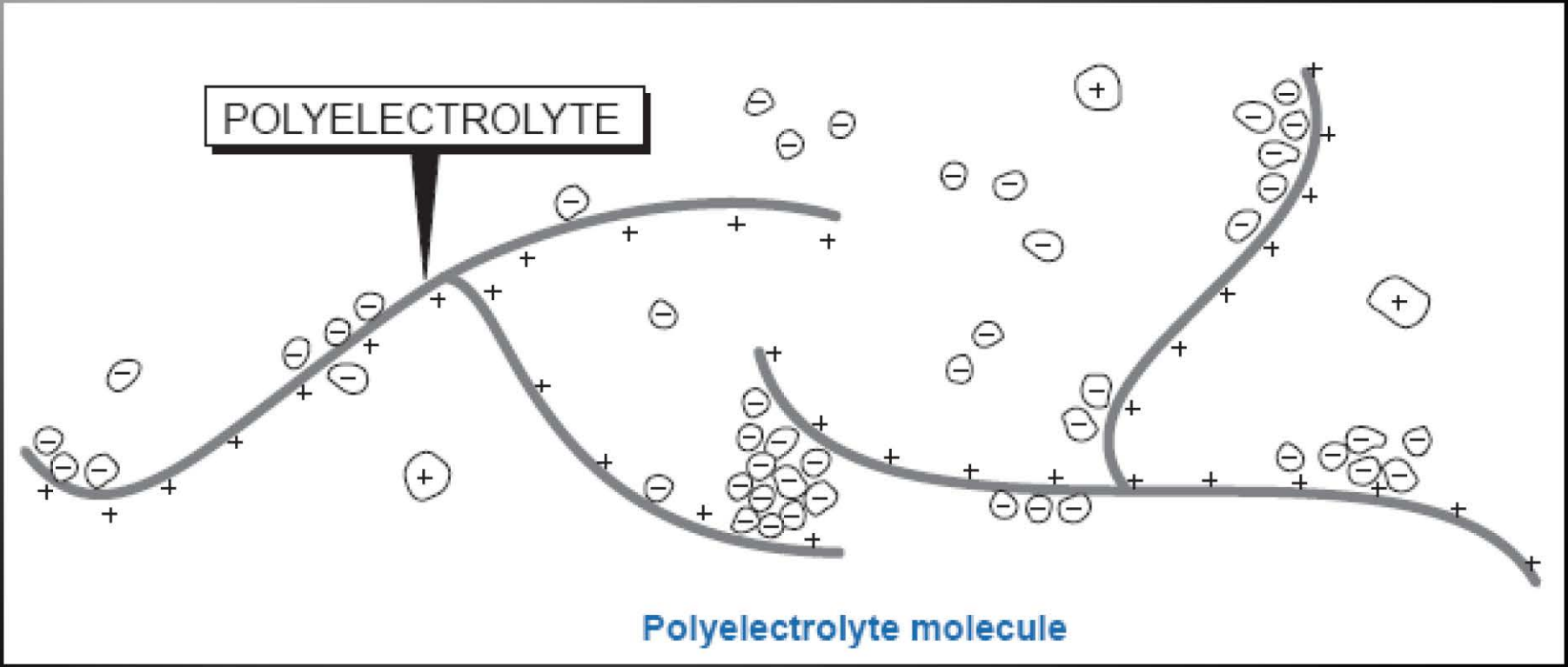

What is coagulation and filtration??

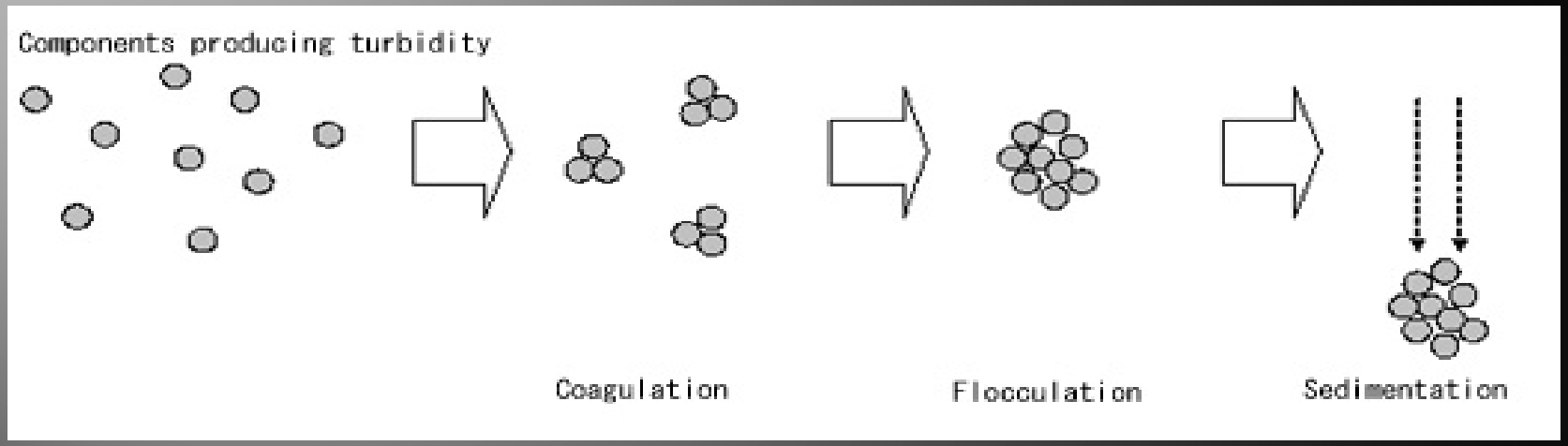

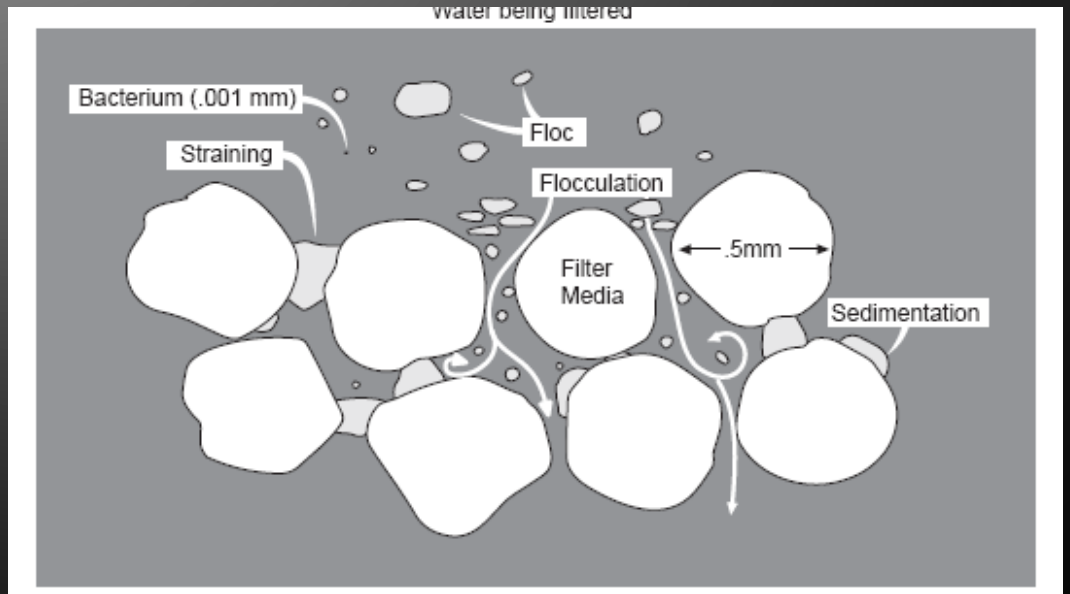

Adsorption of floc onto individual filter grains

Polymer Advantages

- One treatment chemical required
- Does not require pH or alkalinity adjustments
- Does not require flocculation aids
- Effective over wide range of raw water qualities and temperatures
- Does not change pH of water
- Optimum dose can easily be maintained by online instruments to compensate for changes in raw water quality
- Relatively inexpensive – 4 mg/l approximately $ 100/Million Gallons

Advantages of Polymers over Typical Metal Salts

- Form strong floc that can withstand the hydraulic shears present in a direct filtration system
- **Only one correct dosage!** Not as forgiving as a typical metal salt when dosage isn't optimized, but ideal for a scenario with online dosage control

Polymer Dosage

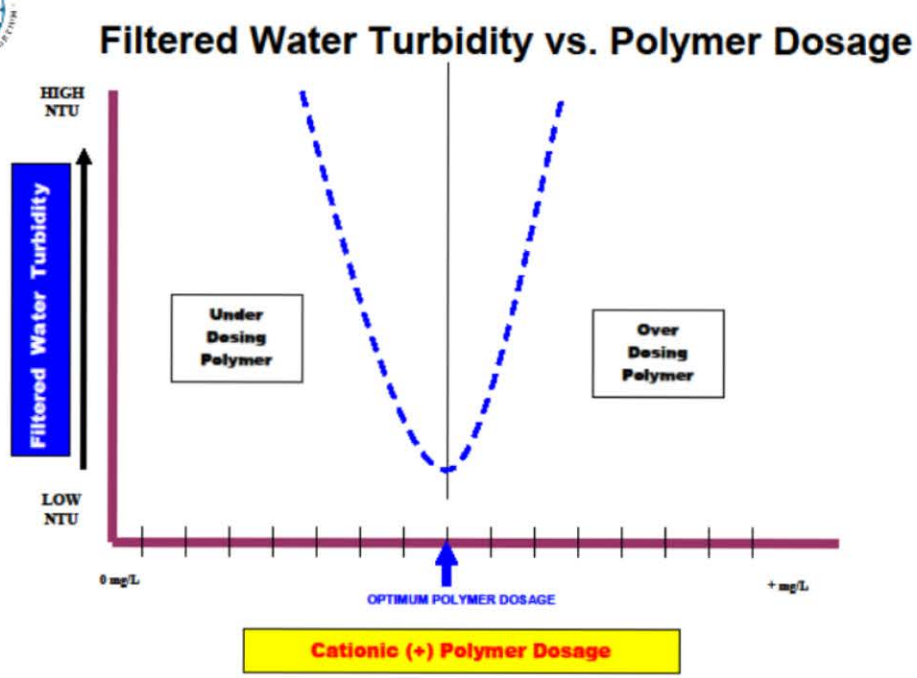

This chart shows the reaction of the Filtered Water Turbidity as the Cationic Dosage is increased. Too little Polymer and too much Polymer will cause the Turbidity to be high. Optimum Turbidity will be achieved when the Net Charge on the Streaming Current Detector or Charge Analyzer is between -10 and +10 from the previous chart.

Note: When the filters end their filter run, filter breakthrough will cause the Filtered Turbidity to increase and the filters need to be backwashed. Any adjustment of Polymer dosage will make the Turbidity increase. Time to Backwash.

Polymeric Coagulants

- Standardize polymers
- Nalcolyte 8105
  - Polyquarternary Ammonium Chloride
  - Characteristics
    - Strong floc
    - Low effective dosage
    - Reduced TOC reductions
- Nalcolyte 8185
  - Polyquarternary Ammonium Chloride and Aluminum Hydroxychloride Blend
    - Lower strength floc
    - Higher effective dose
    - Enhanced TOC reductions

Water Treated With Polymer

Direct Filtration System Schematic

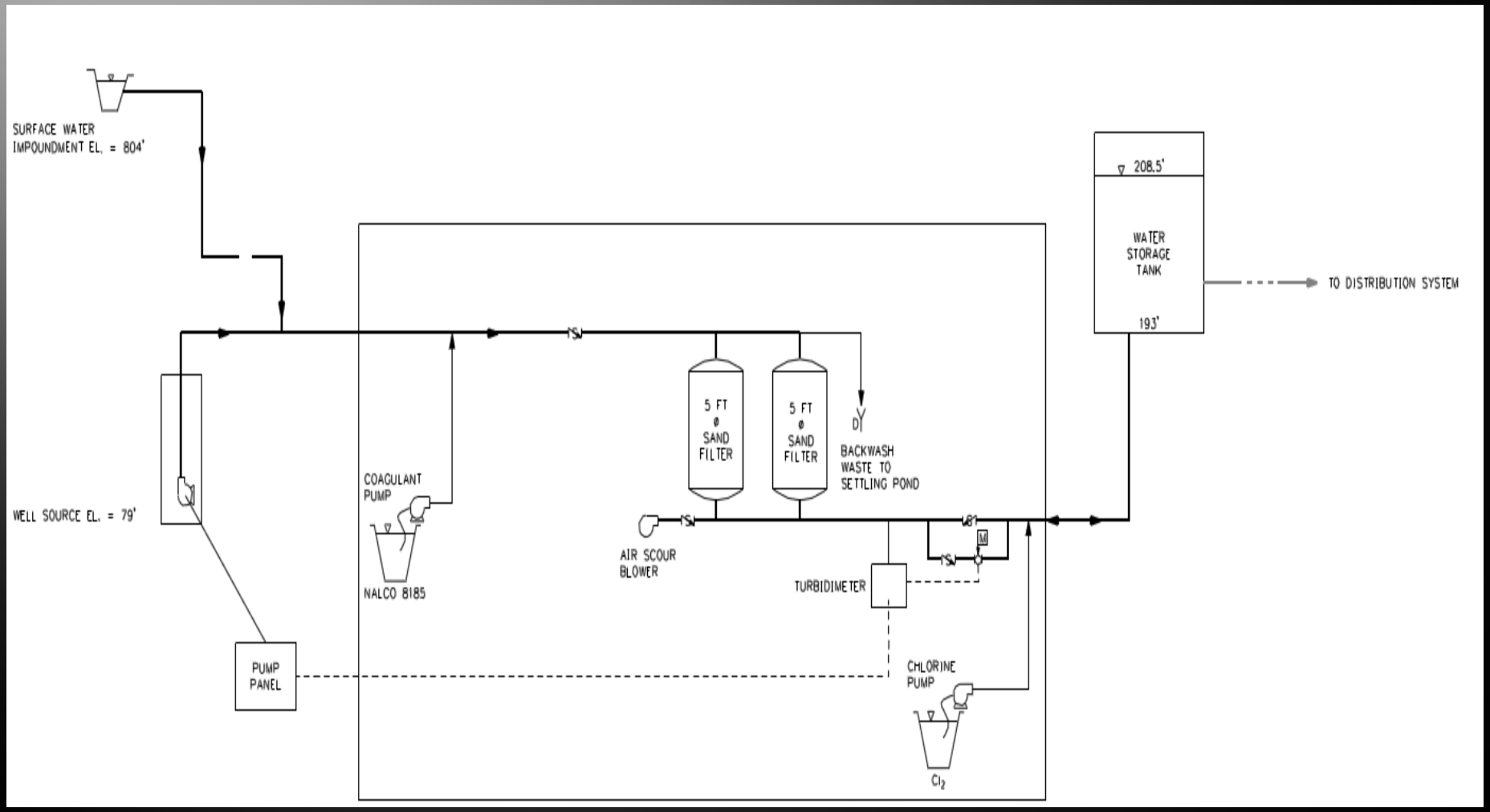

Alaska Pressure Filtration Systems

- Emphasis on automated "turnkey" operation
  - Automated and optimized treatment process
  - Typical effluent turbidity - .03 - .05 NTU
  - Typical effluent color – non –detectable
  - DBP requirements met
- Automated system shutdown
  - Protects customers from untreated water
  - System always meets turbidity regulations

Direct Filtration Design Features

- Polymer mixing – batch and automated
- Injection
- Inline mixer
- Automated polymer dose control – Streaming Current Detector (SCD) charge analyzer.
- Pressure filter design
- Pressure filter operation

Dilute Polymer Makeup System

- Polymer is very concentrated, several gallons of polymer can treat 1 million gallons of water
- Batch or automated dilute polymer makeup system are typically used to mix between a 1/2% to 10% dilute polymer solution for injection

Polymer Batch Mixing

- Smaller systems
- Dilution charts

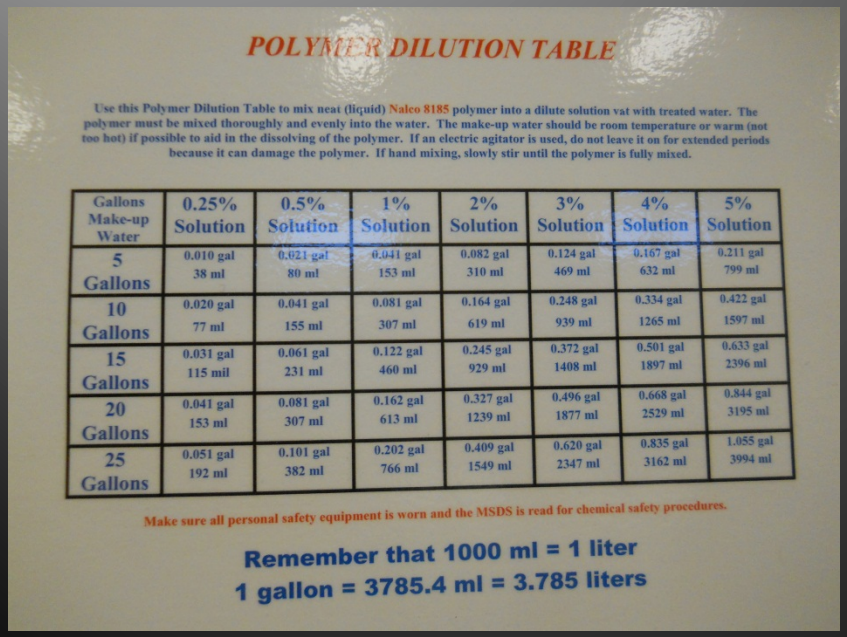

POLYMER DILUTION TABLE

Use this Polymer Dilution Table to mix neat (liquid) Nalco 8185 polymer into a dilute solution vat with treated water. The polymer must be mixed thoroughly and evenly into the water. The make-up water should be room temperature or warm (not too hot) if possible to aid in the dissolving of the polymer. If an electric agitator is used, do not leave it on for extended periods because it can damage the polymer. If hand mixing, slowly stir until the polymer is fully mixed.

Gallons Make-up Water	0.25% Solution	0.5% Solution	1% Solution	2% Solution	3% Solution	4% Solution	5% Solution
5 Gallons	0.010 gal 38 ml	0.021 gal 80 ml	0.041 gal 153 ml	0.082 gal 310 ml	0.124 gal 469 ml	0.167 gal 632 ml	0.211 gal 799 ml
10 Gallons	0.020 gal 77 ml	0.041 gal 155 ml	0.081 gal 307 ml	0.164 gal 619 ml	0.248 gal 939 ml	0.334 gal 1265 ml	0.422 gal 1597 ml
15 Gallons	0.031 gal 115 mil	0.061 gal 231 ml	0.122 gal 460 ml	0.245 gal 929 ml	0.372 gal 1408 ml	0.501 gal 1897 ml	0.633 gal 2396 ml
20 Gallons	0.041 gal 153 ml	0.081 gal 307 ml	0.162 gal 613 ml	0.327 gal 1239 ml	0.496 gal 1877 ml	0.668 gal 2529 ml	0.844 gal 3195 ml
25 Gallons	0.051 gal 192 ml	0.101 gal 382 ml	0.202 gal 766 ml	0.409 gal 1549 ml	0.620 gal 2347 ml	0.835 gal 3162 ml	1.055 gal 3994 ml

Make sure all personal safety equipment is worn and the MSDS is read for chemical safety procedures.

Remember that 1000 ml = 1 liter
1 gallon = 3785.4 ml = 3.785 liters

Automated Polymer Mixing

- Eliminates frequent batch mixing for higher volume systems
- System components include dilute polymer vat with level control, solenoid valve, neat polymer drum, mix mate and inline mixer.

Polymer Injection, Mixing and Sampling

- Inject at pipe midpoint immediately upstream of static mixer
- Static mixer sizing (3-4 psi head loss at design flow)
- Sample at midpoint of pipe < 2 minute delay to SCD

Automated Dose Control

- Need to maintain optimum dose
- Match polymer demand that varies based on raw water flow rate and possible rapidly changing water quality.
- Smooth delivery of polymer
- Compensates for errors in solution strength

Streaming Current Detector(SCD)

- Maintains optimum polymer dosage
- Manually input "setpoint" or desired charge
  - Desired finished water quality
- PV or "Process Value" or charge of process water after injection with polymer
- Polymer pump receives analog signal from SCD
- SCD adjusts polymer dose to match setpoint

SCD Key Design Features

- Hydro cyclone
- Clear PVC
- Quick disconnects
- Probe jet wash
- Recycle options

Polymer Pump

- Milton Roy polymer pump
- Two independent dose control (analog control)
  - Electronic Capacity Control (ECC) – pump stroke controlled by Streaming Current Detector
  - VFD drive motor flow paced or manually controlled.

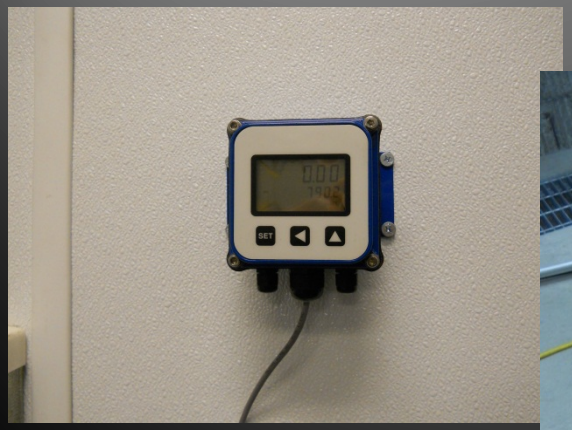

Automated Dose Control

- SCD controls output of polymer pump from 0 – 100 %
  - Match polymer solution strength with desired range of dose
  - Desired 20 -40 % (Sweet Spot) maximum capacity of pump allows flexibility in polymer demand
  - SCD "hunts" at small capacities. SCD adjusts in 1 % increments on a 100 % scale. A 1 % increment is already too coarse of adjustment.

Example dose control

- System flow varied by water storage tank level
- Steady flow
- Streaming current detector adjusts polymer pump stroke
- Motor speed manually to keep SCD in sweet spot

Example Dose Control

- Systems that experience large changes in flow rate
- Motor speed automatically adjusted by system flow
- Stroke controlled by SCD

Portable Charge Analyzer

- Reliable backup to SCD
- Required by State Regulators
- Replaces jar tester

UV 254 meter (setpoint control)

- Measures UV254 absorbance by organics
- Correlates with TOC removal – raw and filtered
- Allows fine tuning coagulation process
- Real tech portable UV meter

Pressure Filter Design

Kasaan 5 ft Pressure Vessels

Pressure Filter Design

- All ANTHC pressure filters are custom
  - Key Features
    - Top inlet (backwash outlet)
      - Inlet diffuser prevents "coning" of filter media at high flow rates
      - Top backwash outlet more effective design than "overflow trough" and side outlet (need diagram). Can backwash at higher than normal rates to remove heavier captured sediment and/or debris
    - Window and light
      - LED lights – maximum brightness, low heat, no ballast (compared to HID)
      - 4" x 18" window – observe media condition, visual verification of correct backwash flow rate
    - 14" x 18" manways
      - "normal" sized person can get in/out of filter

MEDIA #	NAME	EFFECTIVE SIZE RANGE (MM)	UNIFORMITY COEFFICIENT
FM1	SUPPORT GRAVEL	13–19	–
FM2	SUPPORT GARNET	1.61	1.21
FM3	FILTER SAND	0.45 – 0.55	1.43
FM4	COARSE ANTHRACITE	1.7 – 2.0	< 1.6

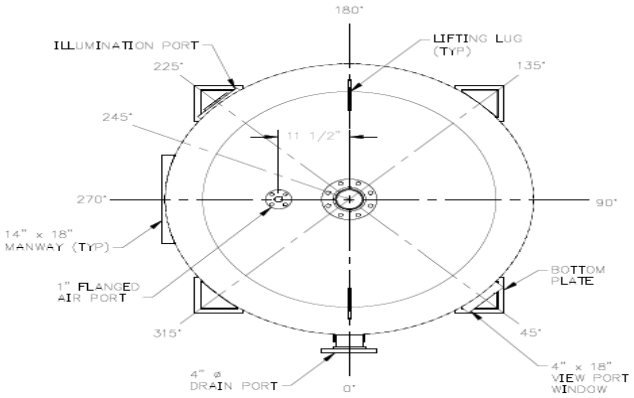

C2 60 INCH FILTER PLAN VIEW
NTS

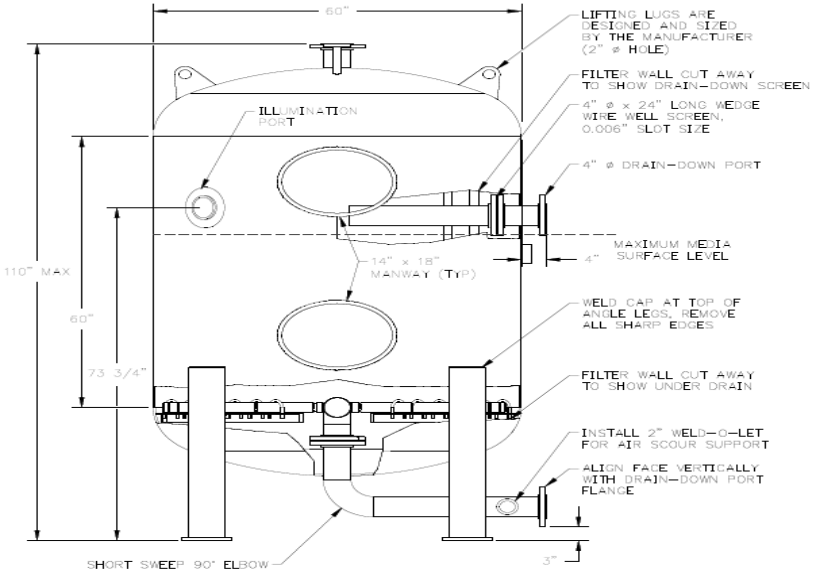

A1 60 INCH FILTER SECTION VIEW - 270 DEGREES
NTS

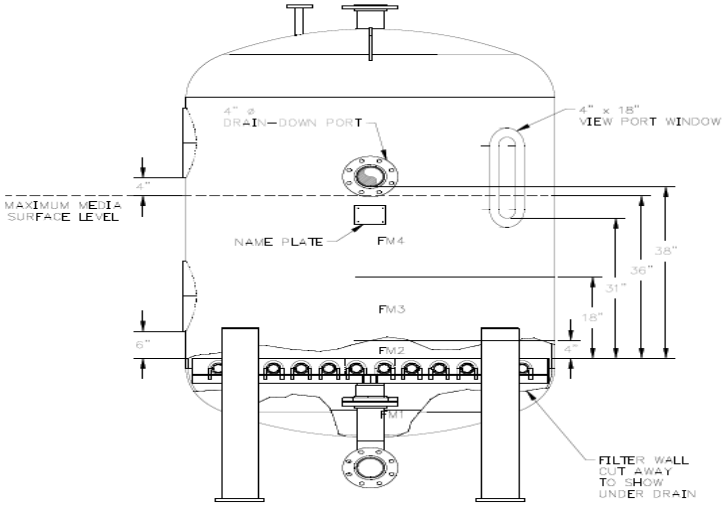

A2 60 INCH FILTER FRONT VIEW - 0 DEGREES
NTS

Filter Inlet Diffuser

Pressure Filter Design Cont.

- Filter Underdrains
  - "Heart" of the filter
  - Custom underdrain system
    - "Off-the-shelf" filter design includes a separate air headed and water header. The air header is placed between the supporting bed and filtration media
    - "Off-the-shelf" filter design is for layered gravel to support filtration media
    - Custom design uses one underdrain for both air and water distribution. Minimizes filter size (media depth) while outperforming "off-the-shelf" designs in terms of air and water distribution for air scour and backwash
  - ANTHC uses higher number of laterals than "off-the-shelf" pressure filter designs for most uniform backwash and air distribution

Pressure Filter Design Cont.

- Each lateral consists of a perforated "core" pipe enclosed in a wedge wire well screen
  - Wedge wire well screen prevents filter media from getting in the orifices. This is very important because air scour (upcoming) upsets the stratification of typical mixed media filter supporting beds
  - The underdrain is engineered with a specified quantity and size of orifices to achieve uniform distribution of air and backwash water from each orifice.
  - Typical design is 10 feet H20 head loss across each orifice at design backwash flow rate across the entire manifold. This means the entire manifold has 10 ft H20 head loss at design backwash flow. 10 foot was determined minimum head loss to achieve greater than 90% flow consistency through each orifice in the manifold, thus even distribution of backwash water
  - Laterals are also designed for uniform distribution of air for air scouring filters
    - Air has much lower frictional losses than water so the holes cannot be sized for uniform air flow if want to use the same manifold for both air and water
    - Primary orifices are orientated downward
      - Air would otherwise be mostly vented at the beginning of each lateral, not uniform flow
        - Efficacy was determined experimentally by constructing and testing a model lateral

NOTES:

1. THE INDICATED LATERAL LENGTHS ARE THE MAXIMUM ALLOWABLE INSTALLED DIMENSIONS.
2. MINIMUM INSTALLED DIMENSIONS MUST BE WITHIN 1/4" OF THE DIMENSIONS INDICATED.
3. ALL MANIFOLD MATERIAL IS TO BE 304L OR 316L STAINLESS STEEL (SS).
4. PROVIDE VERTICAL SUPPORT FOR EACH LATERAL. VERTICAL SUPPORTS MUST BE POSITIONED BETWEEN THE MID SPAN AND END OF EACH LATERAL OR AS SHOWN.
5. LATERALS TO BE FACTORY INSTALLED. EACH LATERAL IS TO BE SECURELY FASTENED TO ITS SUPPORT WITH A SS U-BOLT.
6. PROVIDE A DIELECTRIC CONNECTION BETWEEN ALL CARBON STEEL AND SS CONTACT, IF ANY
7. LATERALS MUST BE INSTALLED SUCH THAT THE TOP SURFACE OF EACH LATERAL IS PARALLEL WITH THE PIPING AXIS
8. COAT ALL THREADS WITH AN ANTI-SEIZE COMPOUND PER SPECIFICATIONS.

MANIFOLD DESIGN CRITERIA

5' ø PRESSURE FILTER

BACKWASH UNIT FLOW RATE: 16 GPM/FT²

TOTAL BACKWASH FLOW RATE = 314 GPM

TOTAL MANIFOLD HEAD LOSS AT 314 GPM: 12' WATER MAXIMUM

AIR SCOUR FLOW RATE: 4 CFM/FT² ~ 80 CFM

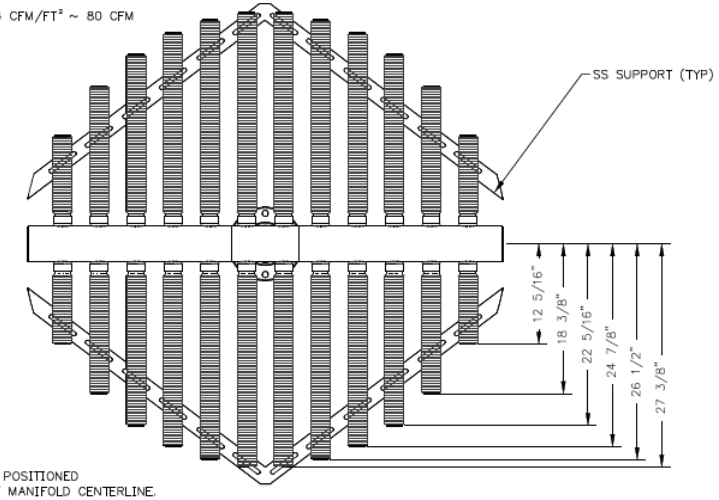

NOTE:

EACH LATERAL MUST BE POSITIONED WITHIN 1/16" OF THE 4" MANIFOLD CENTERLINE.

B1 FILTER UNDERDRAIN SYSTEM - PLAN

NTS

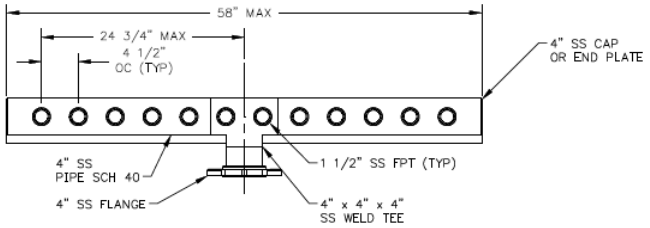

A1 FILTER UNDERDRAIN SYSTEM - ELEVATION

NTS

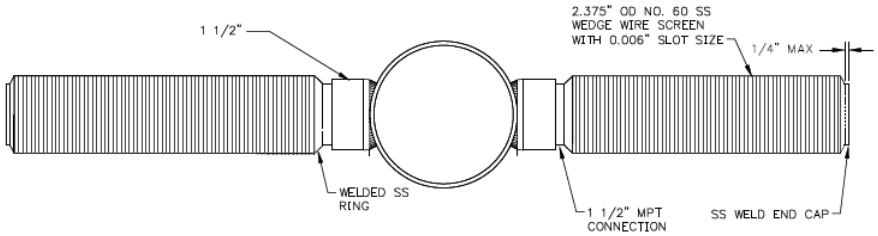

D3 MANIFOLD - WEDGE WIRE SCREEN

NTS

NOTE:

DRILL THREE EACH 1/8" ø HOLES ON THE TOP OF EACH LATERAL. PLACE TWO OF THE HOLES WITHIN 1/2" OF START AND END OF SCREEN SECTION. PLACE THE THIRD HOLE AT MID POINT OF LATERAL.

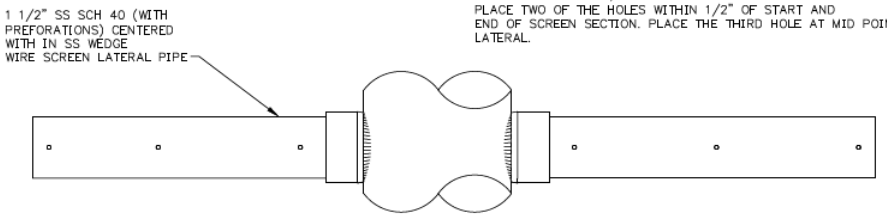

C3 MANIFOLD - INTERNAL LATERAL PIPE TOP VIEW

NTS

NOTE:

DRILL 1/8" ø HOLES AT 2" OC STAGGERED AS SHOWN.

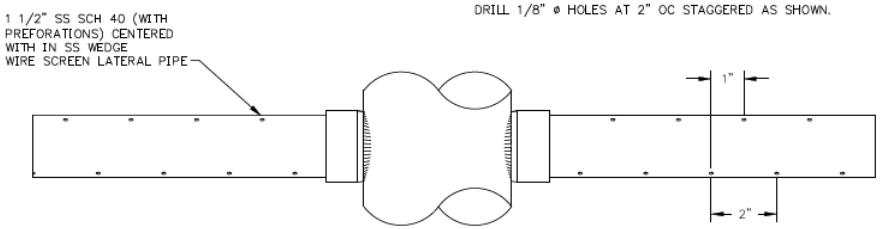

B3 MANIFOLD - INTERNAL LATERAL PIPE BOTTOM VIEW

NTS

NOTE:

TOP OF PIPE LOCATION MUST BE CLEARLY ETCHED INTO EACH MATERAL PIPE AND VISIBLE FROM ABOVE WITH THE WIRE WRAP SCREEN INSTALLED AS SHOWN IN DETAIL.

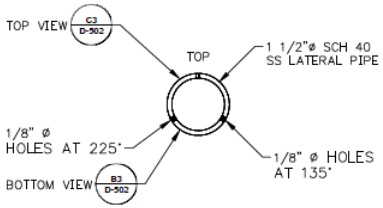

A3 MANIFOLD - INTERNAL LATERAL PIPE SECTION

NTS

Filter Underdrain

Filter Media Design

- Most systems uses either silica sand or greensand
- Support gravel, garnet, sand, anthracite
  - Heaviest media on bottom, lightest on top
  - Garnet layer is employed to provide diffusion of backwash and air scour flows
  - Media re-stratifies as backwash rates are slowly reduced

Filtration Media

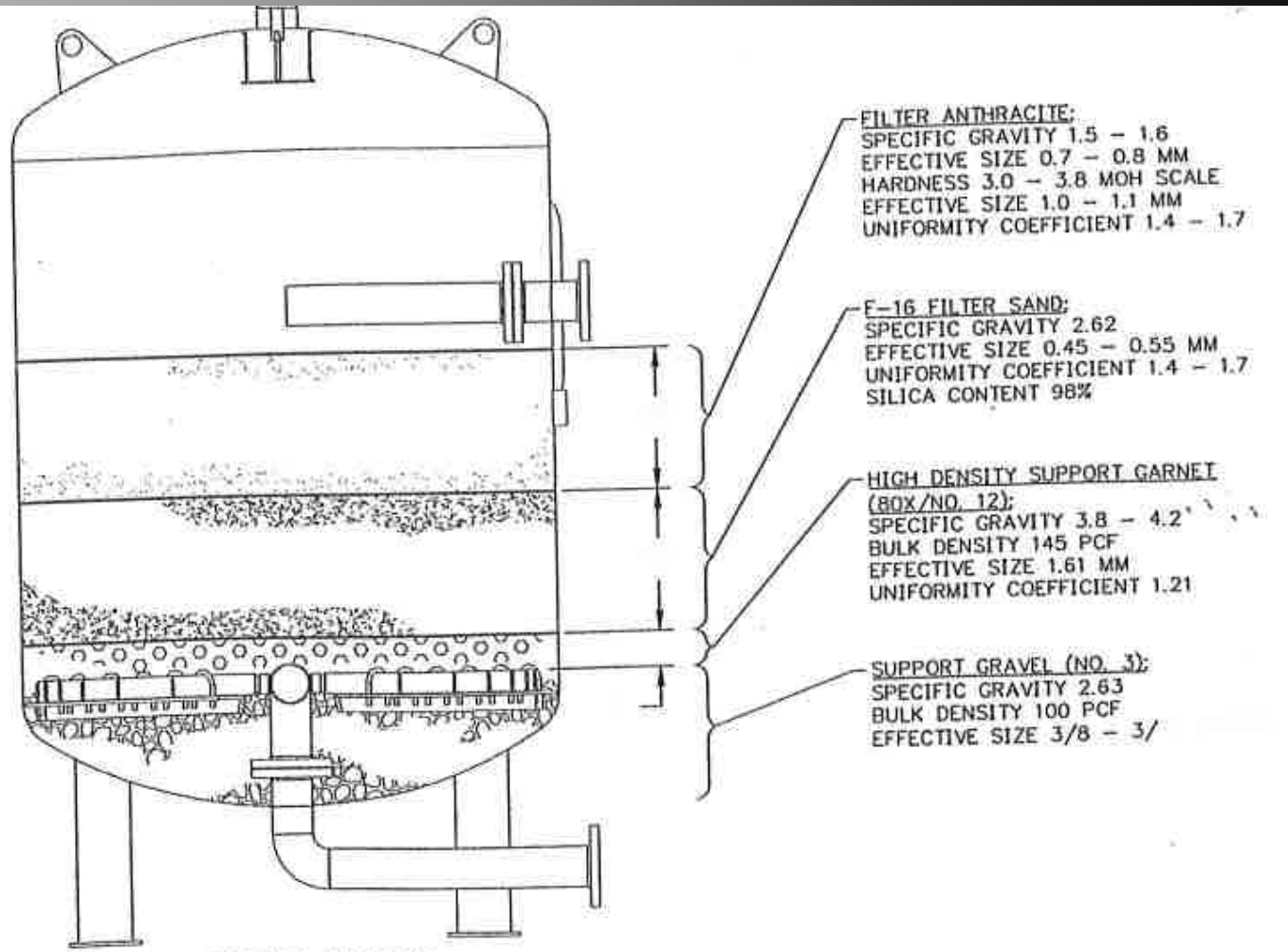

MEDIA INSTALLATION

A3

Air Scour/Backwash Operations

- Pressure differential of 6 p.s.i. or turbidity breakthrough
- Backwash Process
  - Drain filters to 2" above media height
  - Air scour @ 4 CFM/SQ FT (Filter Area) for 5 -10 minutes
  - Upflow backwash @ 12 GPM – 15 GPM/SQ FT
  - Rinse to waste until turbidity is acceptable (< 30 minutes)
  - Return to service

Air Scour and Backwash

- Air scour is used prior to backwash to break up captured organics and "mud balls"
  - Proper air scour is critical to long term media performance when using polymers – 15+ years life with air scour, ~5 years life without
  - Typical air scour flow rate of 4 cfm/sf
- Backwash
  - 16 gpm/sf for silica sand filters
  - 12 gpm/sf for greensand filters

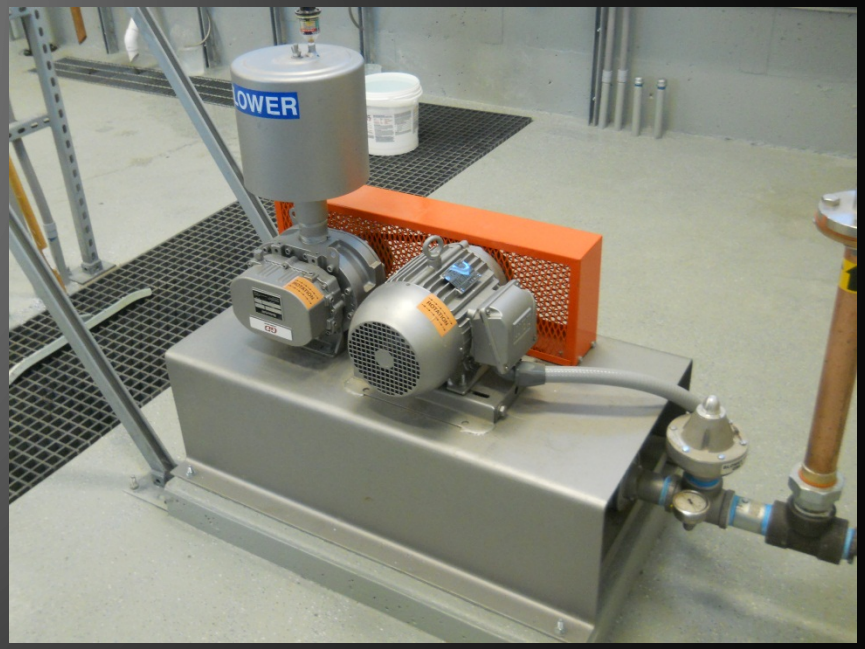

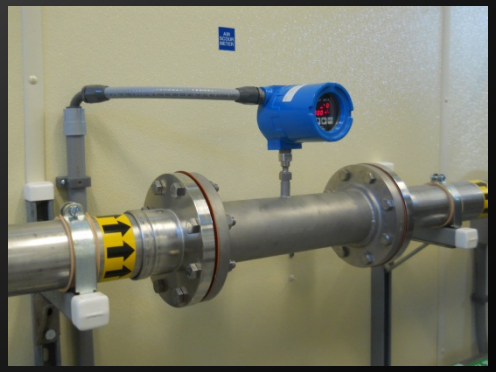

Polymer System Limitations

- Poor efficiency if water source has high coagulant demand, typically driven by high levels of dissolved organics
- TOC/DOC removal percentages are essentially fixed for a given polymer and given raw water source
  - Can't add more polymer and get better removals
  - DBPs can be a problem
- Pilot study necessary to verify application
- Experience is that 80 % of source water can be effectively treated with pressure direct filtration both primary and secondary

Pilot Study Equipment

Flexibility to Treat Surface Sources influenced by Groundwater

- Surface water sources can seasonally exhibit groundwater characteristics with high iron and manganese concentrations.
- Can combine oxidation processes with pressure filtration.

Automated Shutdown

- Alaska idea
- High NTU shutdown
- Prevents high NTU water from entering system
- Gravity – electric actuated control valve
- Pump – motor controls

Remote Monitoring

- Remote monitoring capabilities for key operational parameters allows field assistance from office.

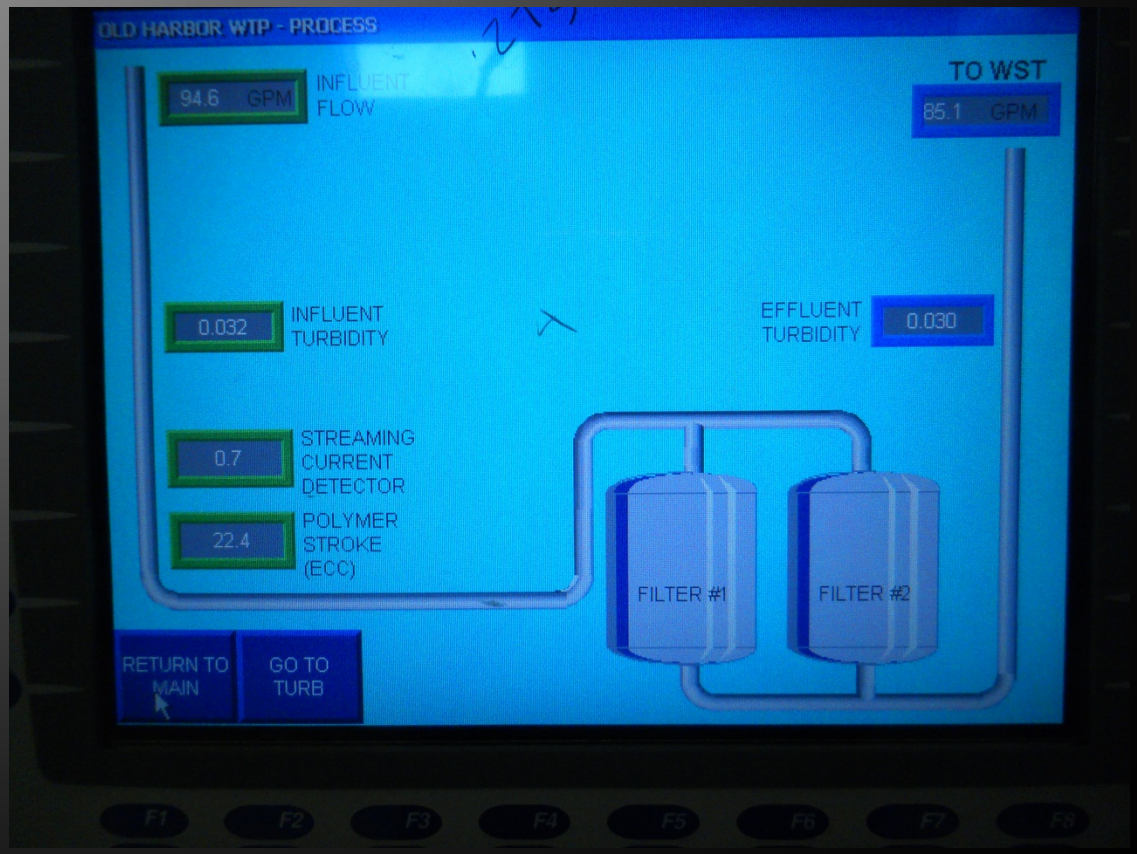

Questions?